TOX® ElectricDrive

Individualized solutions for special operations

Data sheet 40.51
2025/07

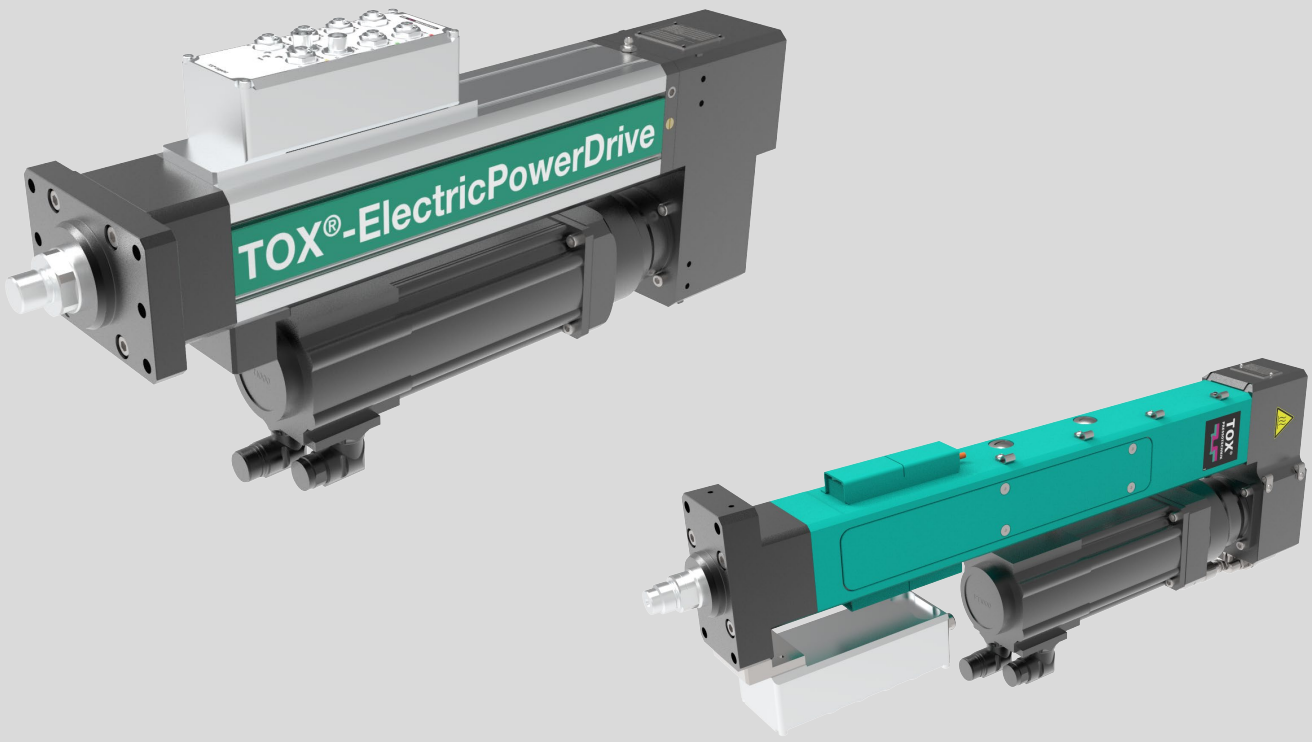

TOX® PRESSOTECHNIK SE & Co. KG, Riedstrasse 4, 88250 Weingarten/Germany
Find your local contact at: www.tox.com

Subject to technical modifications.

TOX® ElectricDrive servo drive extra short

Type EXe-K version 803 with planetary roller screw

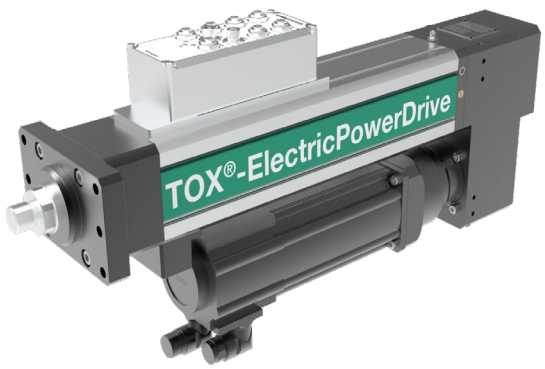

Advantages

- extra short
- small space requirement

With its extra short design, this servo press can be used in compact systems with limited height. In addition, this version 803 is available with a further shortened stroke length of 50 mm.

E version:
The EdgeUnit can be flexibly mounted on the housing in the grooves on the front, on the left or right or externally. The EdgeUnit is connected via the connecting cable (length approx. 1.5 m) from the terminal box to the EdgeUnit.

Installation length comparison:

Drive	Nominal force	Stroke	Installation length
EXe-K version 803 (shortened stroke)	30 kN	50 mm	480 mm
EXe-K version 803	30 kN	150 mm	580 mm
EXe-K	30 kN	150 mm	703 mm

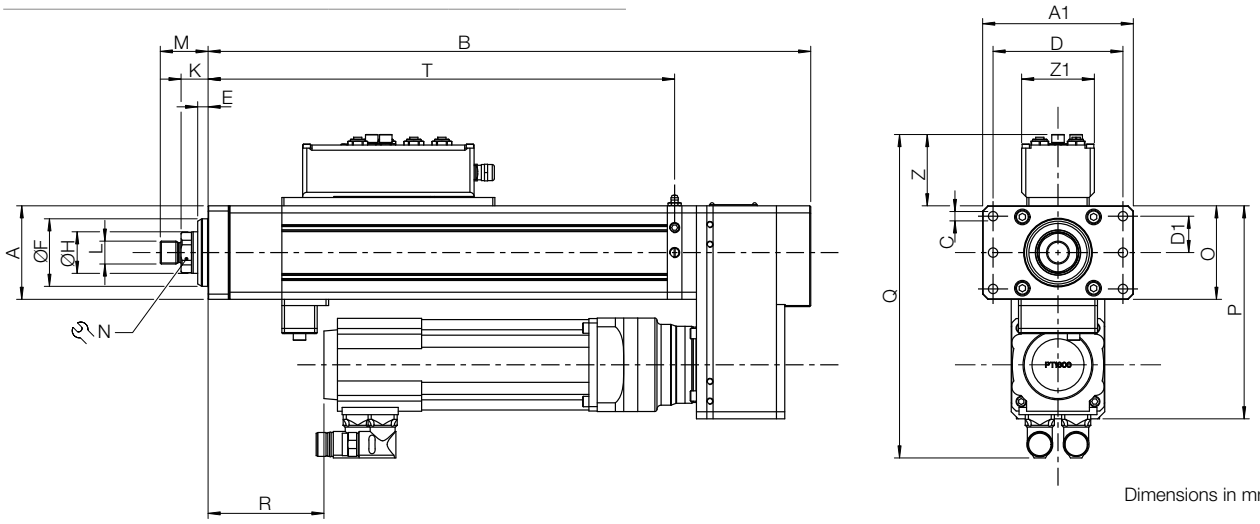

Dimensions in mm

Dimensions and weights

Type	Stroke mm	Max. Nominal force kN	Weight approx. kg
EXe-K 010.803.150	150	10	21
EXe-K 030.803.150	150	30	35
EXe-K 060.803.150	150	60	57
EXe-K 100.803.150	150	100	89
EXe-K 200.803.150	150	200	152

Type	A	A1	B	C	D	D1	E	F	H	K[1]	L	M[1]	N	O	P	Q	R	T	Z	Z1
EXe-K 010.803.150	70	125	551	6x Ø6.6	105	25	8	Ø50	Ø30	26	M12x1.5	38	27	70	165	278	113	409	69	70
EXe-K 030.803.150	90	145	580	6x Ø9	125	35	10	Ø65	Ø40	26	M22x2	46	36	90	205	311	111	449	69	70
EXe-K 060.803.150	105	165	669	6x Ø11	140	40	10	Ø75	Ø50	32	M30x2	57	41	105	255	354	171	512	69	70
EXe-K 100.803.150	130	200	729	8x Ø11	175	35	10	Ø90	Ø50	32.5	M30x2	57.5	41	130	295	436	185	542	69	70
EXe-K 200.803.150	160	235	846	10x Ø13.5	205	32.5	10	Ø105	Ø75	36.5	M39x2	71.5	65	160	345	467	198	614.5	69	70

[1] Dimension refers to reference position of drive. Zero position is reference position +3 mm.8

Specifications	EXe-K 010.803.	EXe-K 030.803.	EXe-K 060.803.	EXe-K 100.803.	EXe-K 200.803.
Mechanical					
Nominal pressing force	10 kN	30 kN	60 kN	100 kN	200 kN
Nominal pulling force	3 kN	8 kN	17 kN	30 kN	60 kN
Max. speed	300 mm / s	280 mm / s	250 mm / s	200 mm / s	120 mm / s
Repeatability[1]	0.01 mm				
Max. tool weight without brake[4] with safety brake / motor holding brake[5]	10 kg 25 kg	15 kg 125 kg	25 kg 300 kg	50 kg 500 kg	100 kg 1000 kg
Sensors					
Force transducer (Strain Gauge) measuring range[2]	0,1 – 10 kN	0.3 – 30 kN	0.6 – 60 kN	1 – 100 kN	2 – 200 kN
System accuracy[6]	≤ ± 0.5 % of nominal pressing force				
Resolver	■	■	■	■	■
Resolution (theoretically)	0.00198 mm	0.00185 mm	0.00185 mm	0.00185 mm	0.00106 mm
Electrical					
Protection class[3]	IP 54				
Power supply connection	see data sheet 40.15 System & Components				
Climatic conditions	+ 10° to + 40° C. from 40° C performance loss. max. 55° C; air moisture < 75 %. without condensation				

[1] In thermal transient condition
[2] Recommended operating range 1 – 80 %
[3] Optional: Protection class IP 65
[4] For higher weights, the tool can extend the piston when power is lost
[5] Higher tool weights on request
[6] Calibrated to press forces in relation to TOX® calibration stand

A wide range of accessories is available for the servo drive type EXe-K (see data sheet 40.95, TOX® ElectricPowerDrive Accessories).

Ordering example

EXe-K 030.803.150.XXX-E

- Mounting version
- Design version
- Stroke (150 mm)
- Version
- Nominal force category(30 kN)
- Type

TOX® ElectricDrive servo drive extra narrow

Type EPMK version 226, 10 and 25 kN

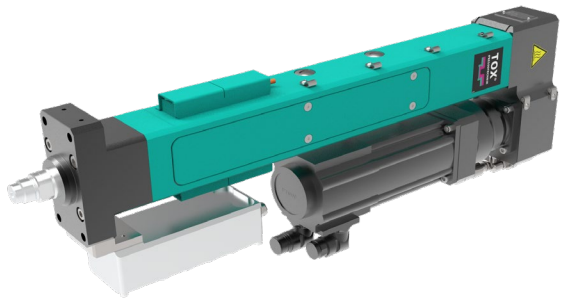

With its narrow design of only 68 mm, this servo press can be perfectly combined in series with an axial distance of less than 70 mm. This way, tasks can be realized in a confined space, e.g. when pressing valves into a cylinder head.

Advantages

- extra narrow
- narrow space requirement

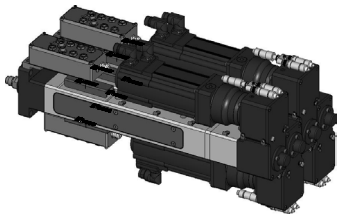

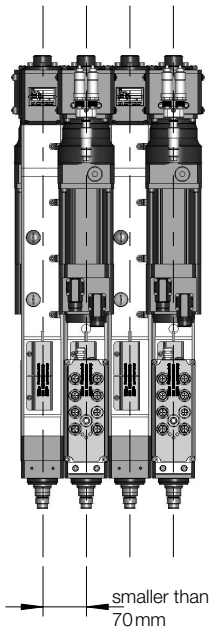

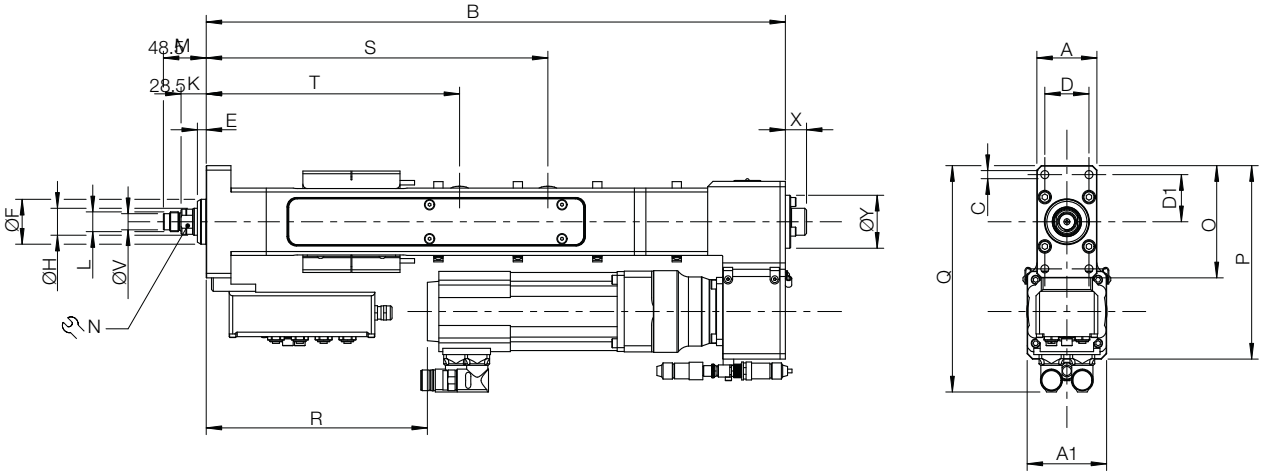

Dimensions in mm

Dimensions and weights

Type	Stroke mm	Max. Nominal force kN	Weight approx. kg
EPMK 010.226.250	250	10	28
EPMK 025.226.250	250	25	28

Type	A	A1	B	C	D	D1	E	F	H	K	L	M	N	O	P	Q	R	S	T	V	X	Y
EPMK 010.226.250	68	90	656	9	50	52.5	10	Ø50	Ø30	20	M12x1.5	32	24	125	216	253	250	387	287	0	24	Ø59
EPMK 025.226.250	68	90	656	9	50	52.5	10	Ø50	Ø30	28.5	M22x2	48.5	24	125	215	253	250	387	287	18	24	Ø59

Dimensions in mm

Specifications	EPMK 010.226.	EPMK 025.226.
Mechanical		
Nominal pressing force	10 kN	25 kN
Nominal pulling force	3 kN	7.5 kN
Max. speed	200 mm / s	200 mm / s
Distance repeatability[1]	0,01 mm	
Max. tool weight without brake[3]	10 kg	15 kg
Sensors		
Force transducer (Strain Gauge) measuring range[2]	0.5 – 10 kN	1.25 – 25 kN
System accuracy[4]	≤ ± 1 % of rated force, pressing	
Resolver	■	■
Resolution (theoretically)	0.00123 mm	0.00123 mm
Electrical		
Protection class	IP54	
Power supply connection	see data sheet 40.15 System & Components	
Climatic conditions	+ 10° to + 40° C, from 40° C performance loss, max. 55° C; air moisture < 75 %, without condensation	

[1] In thermal transient condition
[2] Recommended operating range 5 – 100 %
[3] For higher weights, the tool can extend the piston when power is lost
[4] Calibrated to press forces in relation to TOX® calibration stand

A wide range of accessories is available for the servo drive type EPMK (see data sheet 40.90, TOX® ElectricDrive Accessories).

Ordering example

EPMK 025.226.250.XXX-E

- Mounting version
- Design version
- Stroke (250 mm)
- Version
- Nominal force category (25 kN)
- Type

TOX® EdgeUnit

TOX® EdgeUnit is the decentralized intelligence for each TOX® ElectricPowerDrive

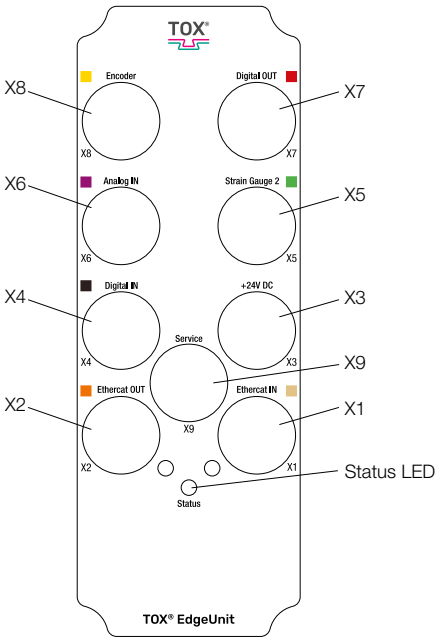

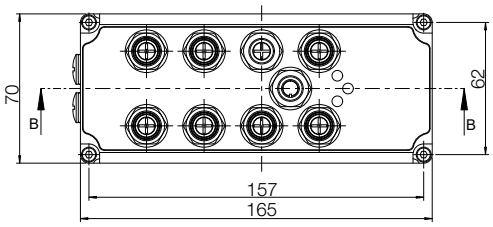

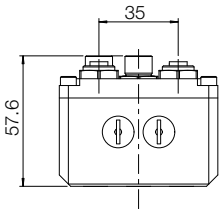

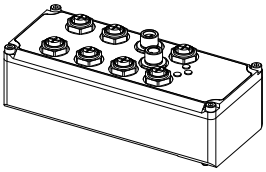

General information:

- Ambient temperature: 0 ... 50°C
- IP protection: IP 65 (plug closed)
- Housing: aluminum
- Status LED shows different states of the TOX® EdgeUnit
- Integrated memory

Technical data/interfaces

X1	Ethercat IN, incl. status LED
Pin assignment	M12 4-pin Bushing, D-coded
X2	Ethercat OUT, incl. status LED
Pin assignment	M12 4-pin Bushing, D-coded
X3	Power supply
Voltage	+ 24VDC (18 ... 28 VDC)
Current draw	US1 <0,25A (without loads at Pin1, X4-7) US2 ~0A (without outputs at X7)
US1 US2	Logic voltage + sensors Output voltage (not electrically isolated)
Pin assignment	M12 5-pin, connector A-coded not AIDA compliant
X4	Digital IN
Digital IN 1 / Digital IN 2	24VDC
Logic level 0 (LOW)	0V ... 10V
Logic level 1 (HIGH)	16V ... 28V
Input current	max. 2 mA (at 24V)
Pin assignment	M12 5-pin bushing, A-coded
X5*	Strain Gauge 2
Measuring range	1.157 mV/V – 3,25 mV/V (intensifier adjustable)
Voltage VDC	5V
Shunt resistor	typ. 700 Ω
Resolution	16 Bit
Pin assignment	M12 5-pin bushing, A-coded

X6*	Analog IN
Analog IN 1	-10 ... 10VDC, 16 bit
Analog IN 2	0 ... 10VDC, 12 bit
Pin assignment	M12 5-pin bushing, A-coded
X7	Digital OUT
Digital OUT 0/Digital OUT 1	24VDC, US2
Output current	max. 2 A (per channel) / overcurrent and short-circuit proof
Pin assignment	M12 5-pin bushing, A-coded
X8*	Encoder
Pin assignment	M12 8-pin bushing, A-coded
X9	Service pin
Pin assignment	M12 8-pin connector, A-coded

*Compatible sensor types available on request

M12 pin assignment

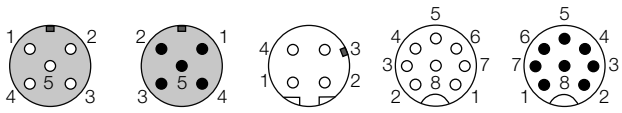

Bushing M12 5-pin A-coded | Connector M12 5-pin A-coded | Bushing M12 4-pin D-coded | Bushing M12 8-pin | Connector M12 8-pin

Pin assignments

EdgeUnit

	Version	Designation	Description
X1	Bushing M12 4-pin, D-coded 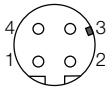	EtherCat In	Pin 1 = TD+ Pin 2 = RD+ Pin 3 = TD- Pin 4 = RD-
X2		EtherCat Out	Pin 1 = TD+ Pin 2 = RD+ Pin 3 = TD- Pin 4 = RD-
X3	Connector M12 5-pin, A-coded 	Power	Pin 1 = 24V US2 Pin 2 = GND US2 Pin 3 = 24V US1 Pin 4 = GND US1 Pin 5 = PE GND US1 = GND US2 = GNO not AIDA compliant
X4	Bushing M12 5-pin, A-coded 	Digital In	Pin 1 = 24V US1 Pin 2 = DIN2 24V Pin 3 = GND Pin 4 = DIN1 24V Pin 5 = PE
X5		Strain Gauge 2	Pin 1 = S- signal strain gauge In Pin 2 = 5 V supply strain gauge Pin 3 = GND supply strain gauge Pin 4 =S+ signal strain gauge In Pin 5 = not occupied
X6		Analog In	Pin 1 = 24V US1 Pin 2 = AIN2 0 ... 10V Pin 3 = GND Pin 4 = AIN1 -10 ... 10V Pin 5 = PE
X7		Digital Out	Pin 1 = 24V US1 Pin 2 = DOUT1 24V US2 (2A) Pin 3 = GND Pin 4 = DOUT0 24V US2 (2A) Pin 5 = PE
X8	Bushing M12 8-pin 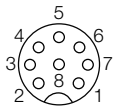	Encoder	Pin 1 = 5V Pin 2 = APR Pin 3 = ANR Pin 4 = BPR Pin 5 = BNR Pin 6 = CPR Pin 7 = CNR Pin 8 = GND

Motor/Motor holding brake (optional)

For EXe-K 010, 030, 060 and EPMK 010, 025

Pin	Designation	Description	Plug
1	BD1	Holding brake DC +/AC	
2	BD2	Holding brake DC -/AC	
PE	PE	Protective conductor	
4	U	Power leg U	
5	V	Power leg V	
6	W	Power leg W	

Type: Intercontec ICN-M23, 6-pin

For EXe-K 100, 200

Pin	Designation	Description	Plug
U	U	Power leg U	
+	BD1	Holding brake +	
–	BD1	Holding brake –	
W	W	Power leg W	
V	V	Power leg V	
PE	PE	Protective conductor	
1		Not occupied	
2		Not occupied	

Type: Intercontec ICN-M40, 8-pin

Resolver

Pin	Designation	Description	Plug
1	+Ref	Transformer windings	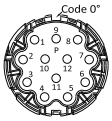
2	-Ref		
3	+VCC ETS	Not occupied	
4	+COS	Stand winding Cosinus	
5	-COS		
6	+SIN	Stand winding Sinus	
7	-SIN		
8		Not occupied	
9			
10	Shield	Housing shield of transmitter	
11	+	Temperature monitoring: PT1000	
12	-		

Type: Intercontec ICN-M23, 12-pin